Chestnut

Art.3044

IT

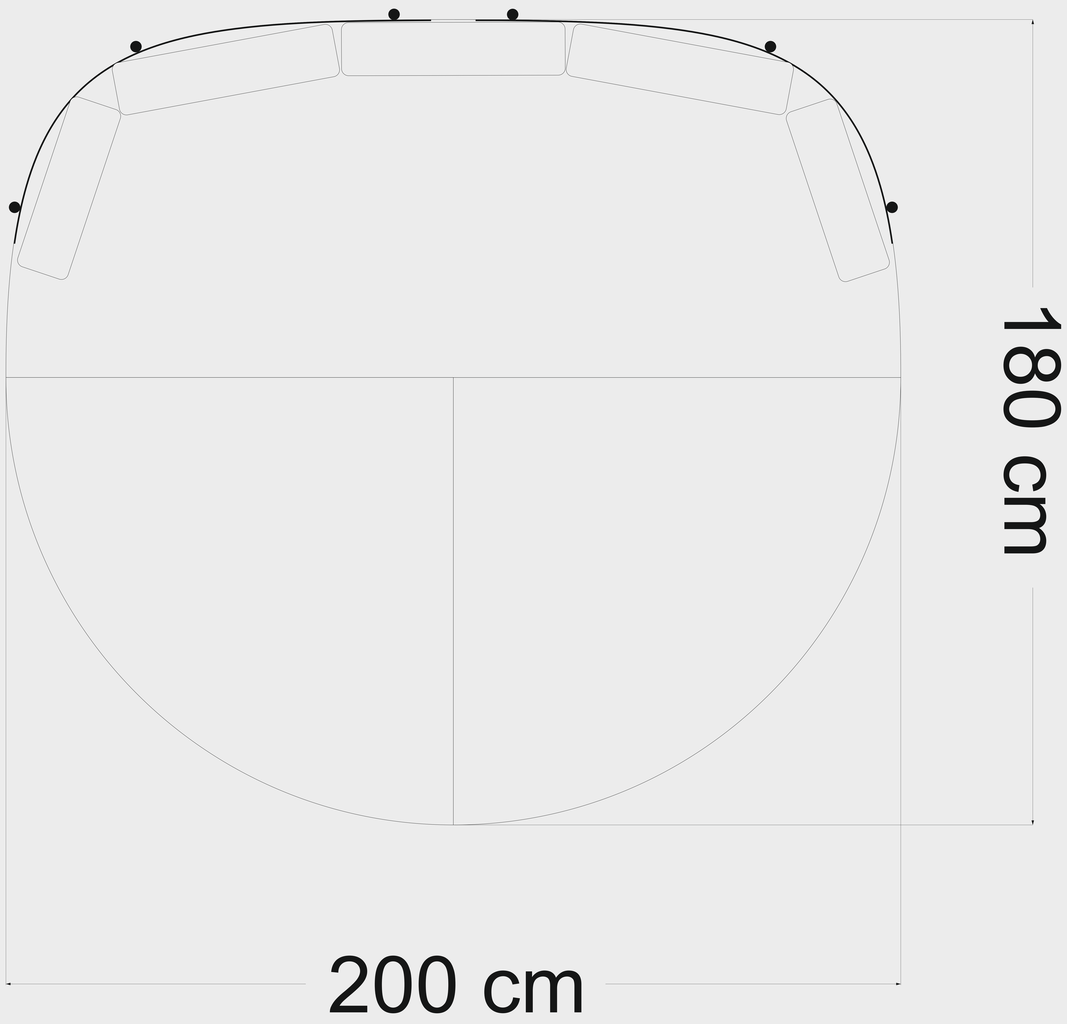

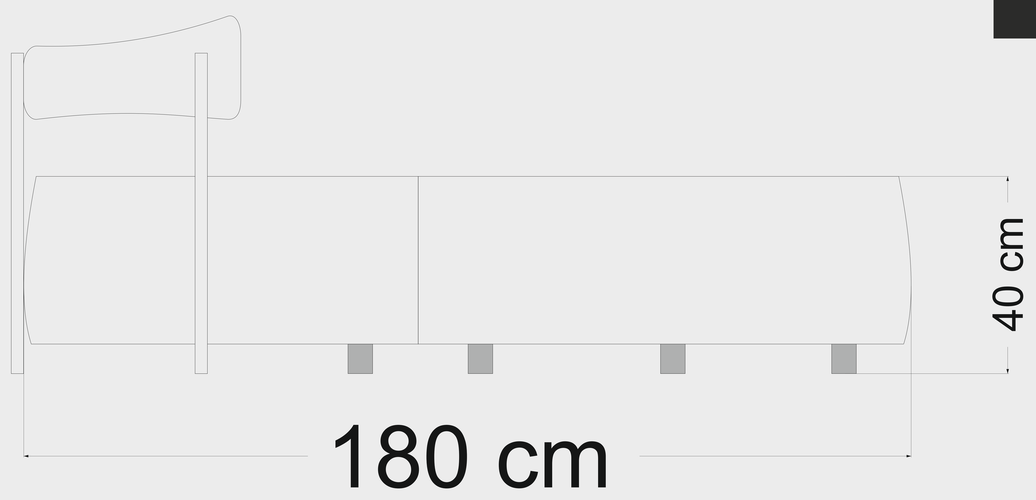

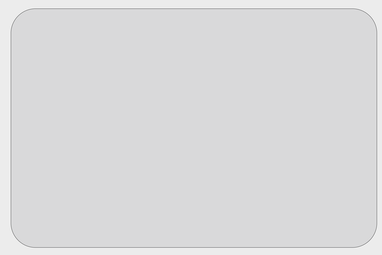

N°3 kit cuscini 50x40cm
spessore10cm

N°2 kit cuscini 40x40cm
spessore10cm

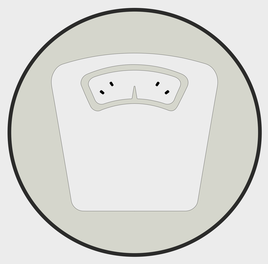

74 kg

INFORMAZIONI

Struttura	Metallo,Multistrato marino e polistirene a freddo
Imbottitura	Poliuretano espanso a densità differenziata
Rivestimento	Tessuto per esterni
Uso	esterno
Montaggio necessario	No
Sfoderabile	Si
Stile	Moderno
Fondo	PVC e spille in Acciaio Inox
Piedi	plastica resistente H 6cm

Pouf con struttura in metallo,legno marino e polistirene a freddo.
Imbottitura in poliuretano espanso a densità differenziata con piede in plastica h 6cm .
Fondo in pvc e punti metalllici in acciaio inox.

Spouf
www.spouf.it

MADE IN ITALY

Chestnut

Art.3044

EN

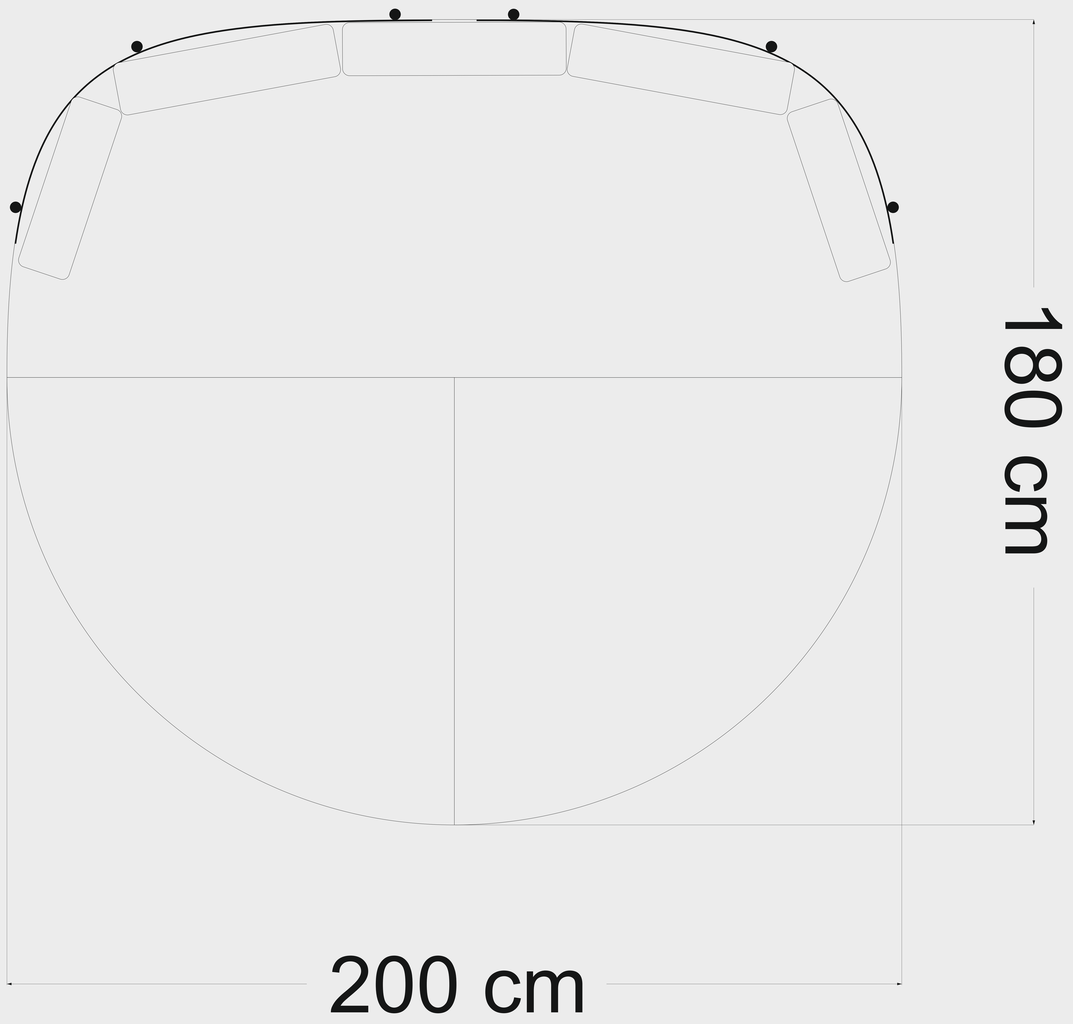

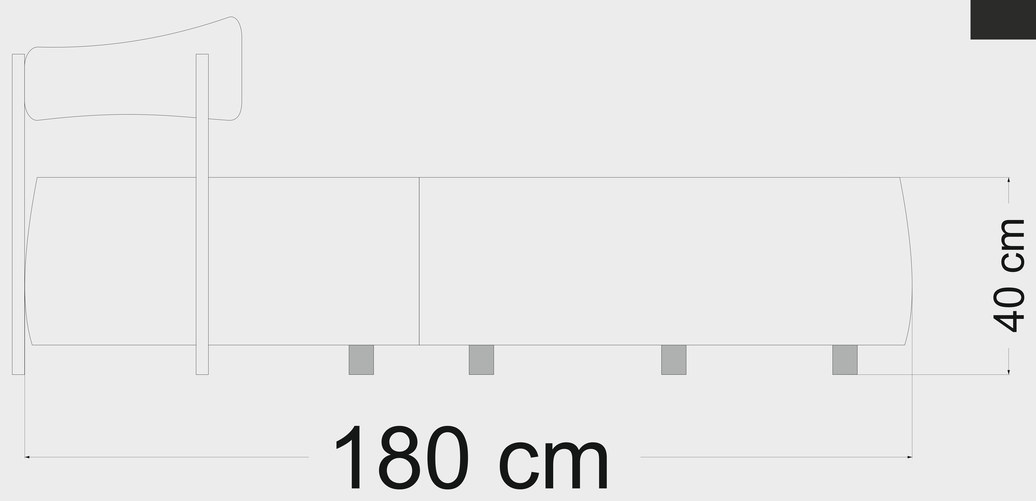

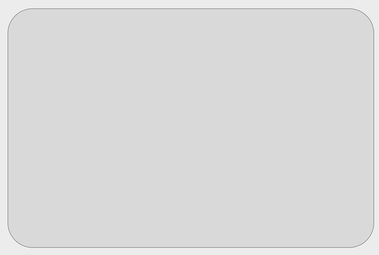

N°3 kit cushion 50x40cm
thickness10cm

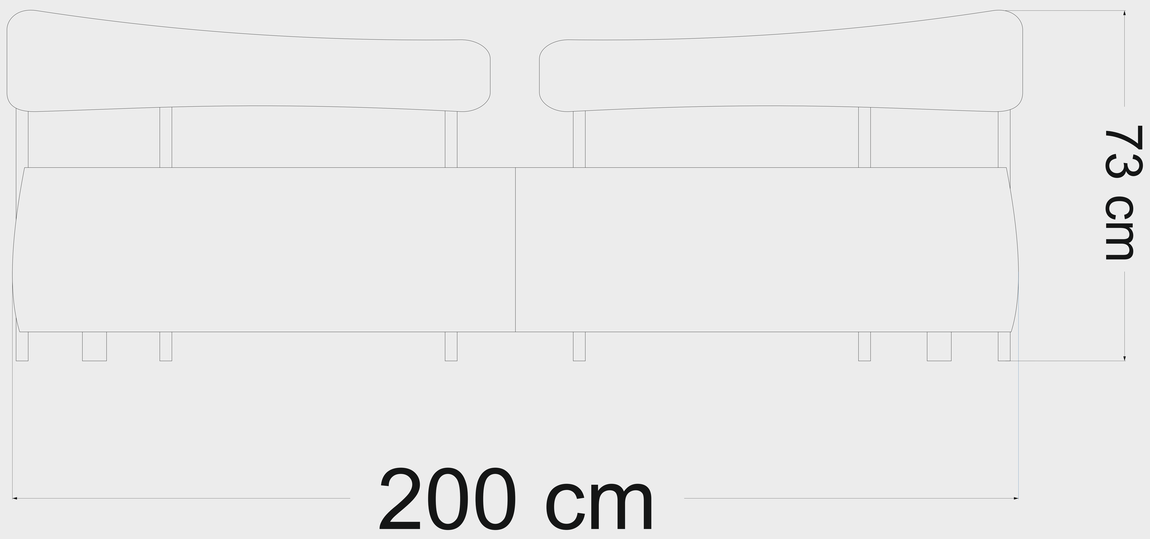

N°2 kit cushion 40x40cm
thickness10cm

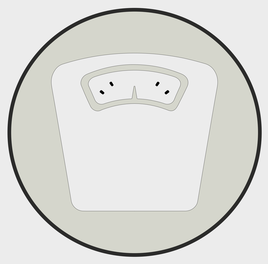

74 kg

INFORMATION

Structure	Metal,marine multilayer wood and cold polystyrene
Padding	Differentiated density polyurethane foam
Coating	Tissue for outdoor
Use	Outdoor
Assembly required	No
Removable	Yes
Style	Modern
Bottom	PVC and stainless steel pins
Foot	resistant plastic H 6 cm

outdoor sofa with metal,marine wood structure and cold polystyrene. Padding in polyurethane foam with different densities with foot in plastic h 6cm.
Pvc bottom and metal points in stainless steel.

Spouf
www.spouf.it

MADE IN ITALY