Tavolo

Art.3072

IT

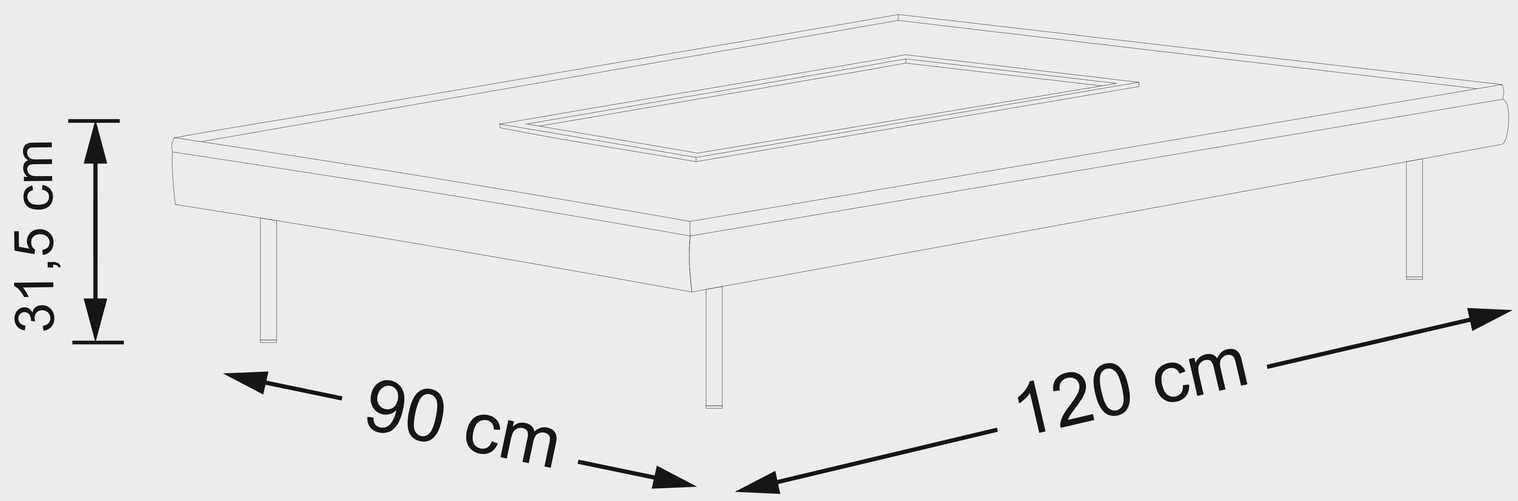

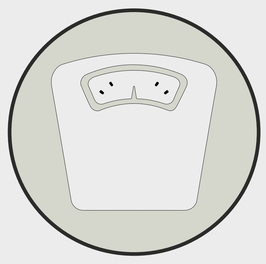

17Kg

INFORMAZIONI

Struttura	Metallo
Uso	esterno
Montaggio necessario	No
Stile	Moderno
Piedi	Metallo con tassello in plastica

Tavolo con struttura zincata e laccata in metallo,con vassoio in metallo laccato oro.
Piede in metallo e tassello in plastica.

Spouf
www.spouf.it

MADE IN ITALY

Table

Art.3072

EN

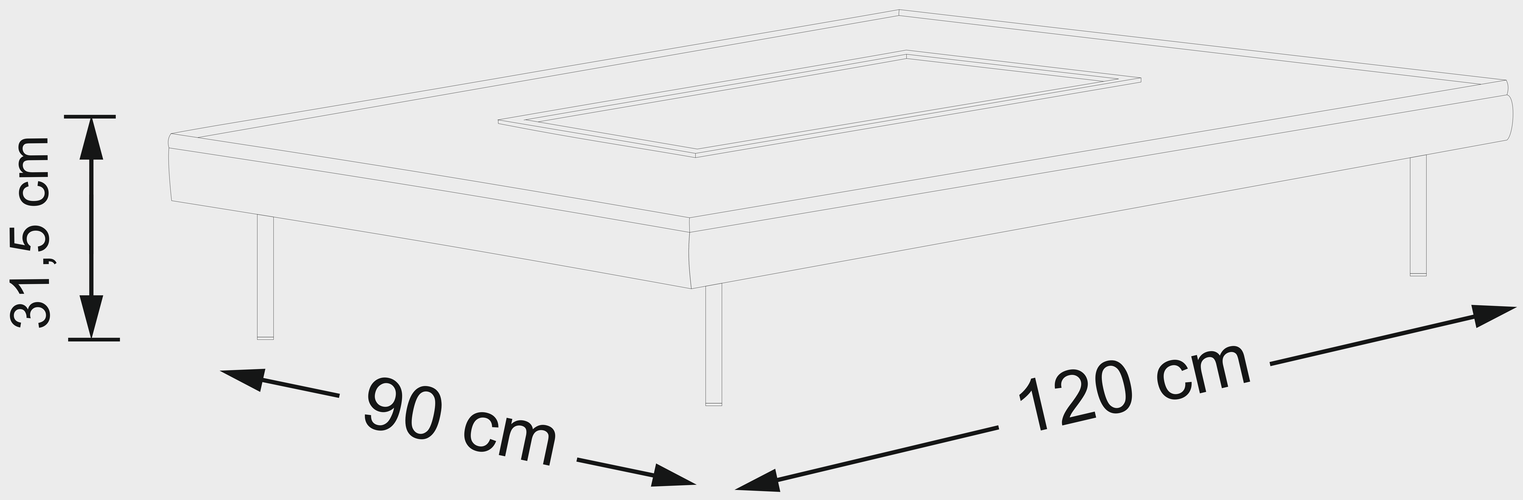

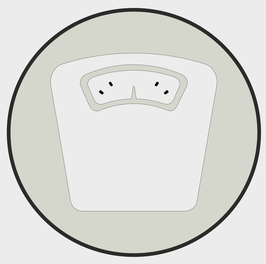

17Kg

INFORMATION

Structure	Metal
Use	Outdoor
Assembly required	No
Style	Modern
Foot	metal with plastic gusset

Table zinc-plated and lacquered metal structure, with metal lacquered gold tray. Metal foot and plastic dowel.

Spouf
www.spouf.it

MADE IN ITALY

Ocean 1p.

Art.3073

IT

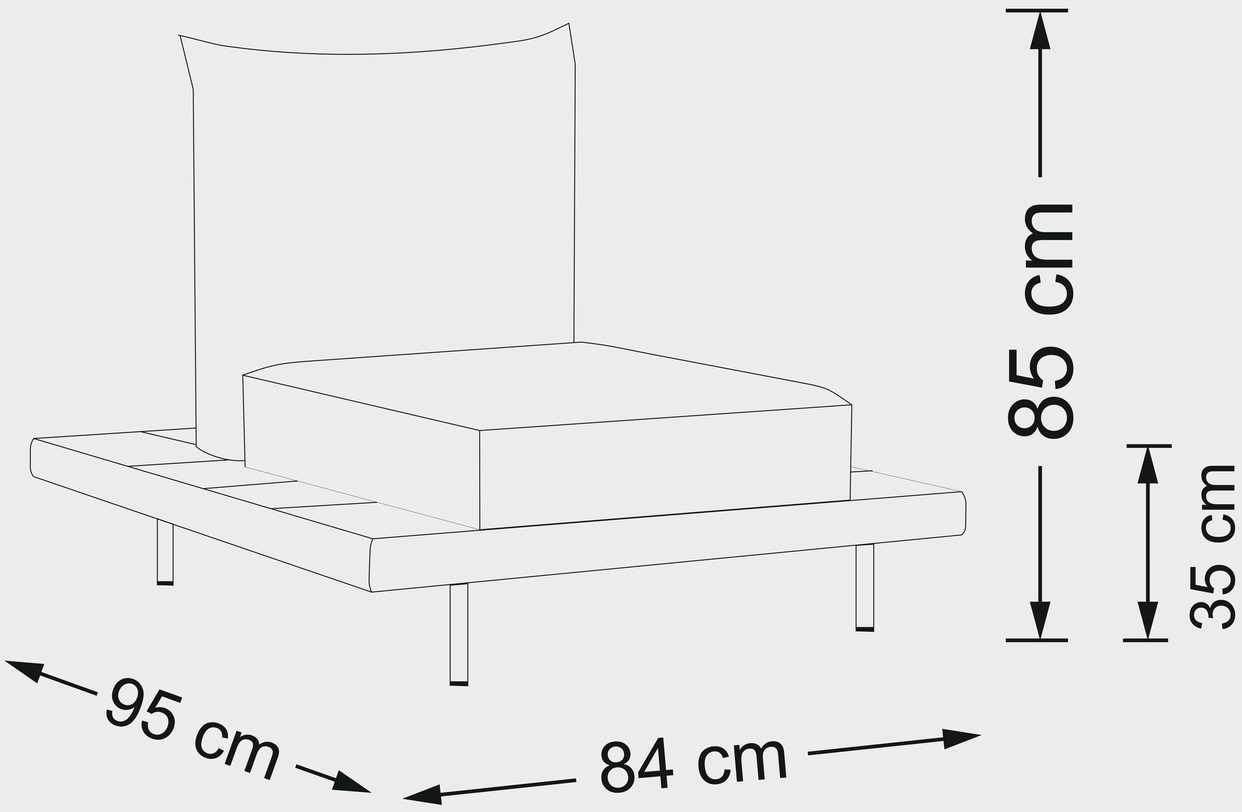

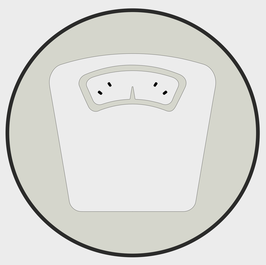

20Kg

INFORMAZIONI

Struttura	Metallo,Multistrato marino
Imbottitura	Poliuretano espanso a densità differenziata
Rivestimento	Tessuto per esterni
Uso	esterno
Montaggio necessario	No
Sfoderabile	No
Stile	Moderno
Fondo	PVC e spille in Acciaio Inox
Piedi	Metallo con tassello in plastica

Divano con struttura zincata e laccata in metallo,con legno marino. Imbottitura in poliuretano espanso a densità differenziata con piede in metallo e tassello in plastica. Fondo PVC e punti metallici in acciaio inox.

Spouf
www.spouf.it

MADE IN ITALY

Ocean 1p.

Art.3073

EN

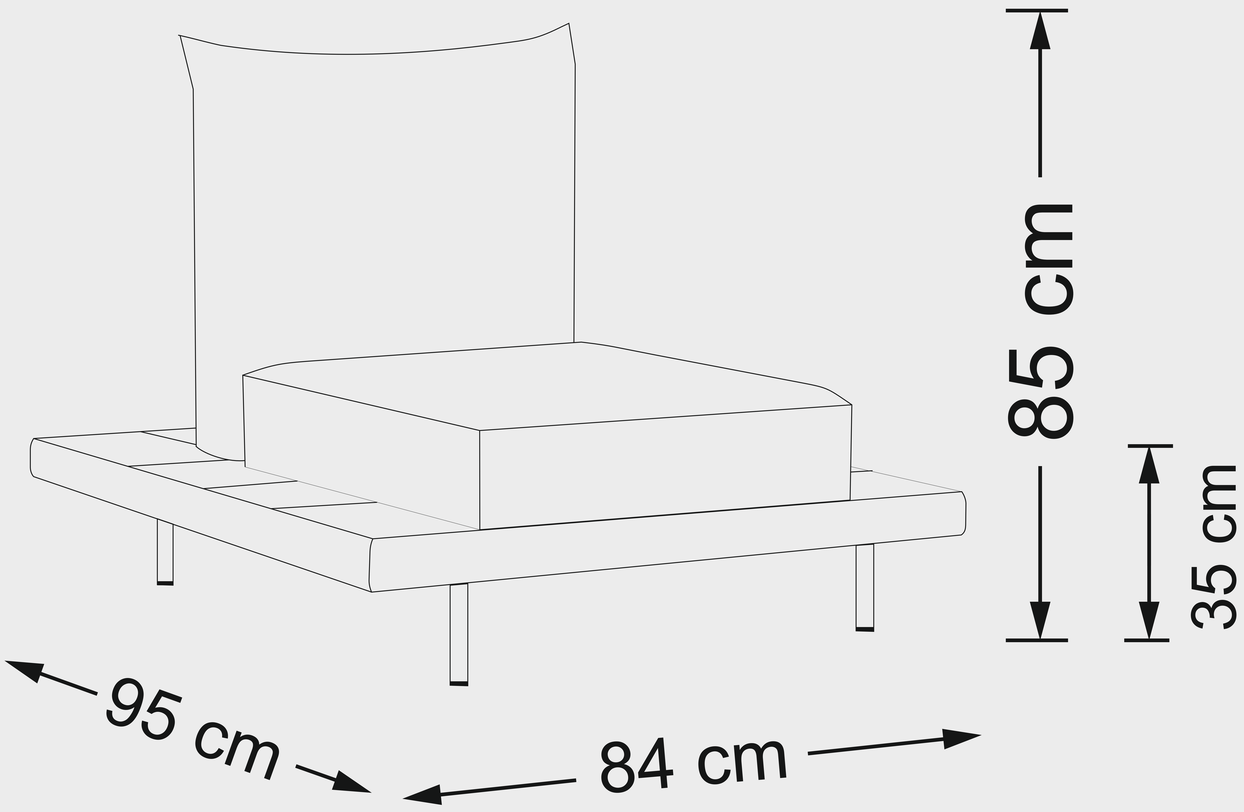

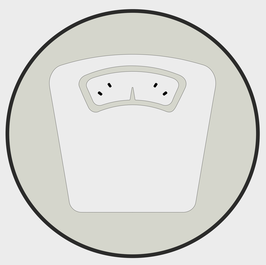

20Kg

INFORMATION

Structure	Metal,marine multilayer wood
Padding	Differentiated density polyurethane foam
Coating	Tissue for outdoor
Use	Outdoor
Assembly required	No
Removable	No
Style	Modern
Bottom	PVC and stainless steel pins
Foot	metal with plastic gusset

Sofa zinc-plated and lacquered metal structure, with marine wood. Polyurethane foam padding with differentiated density, metal foot and plastic dowel. PVC base and staples in stainless steel.

Spouf
www.spouf.it

MADE IN ITALY

Ocean 2p.

Art.3074

IT

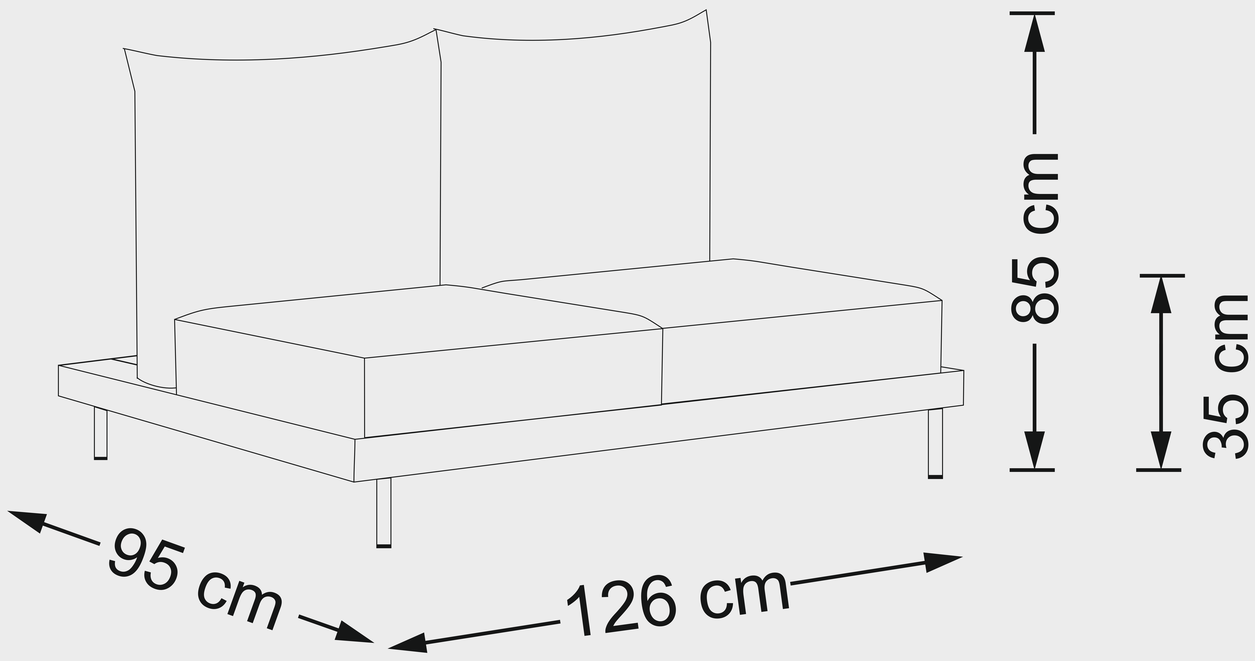

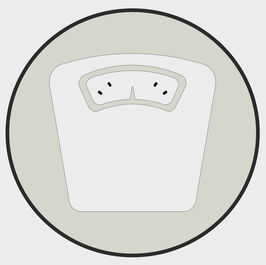

32Kg

INFORMAZIONI

Struttura	Metallo,Multistrato marino
Imbottitura	Poliuretano espanso a densità differenziata
Rivestimento	Tessuto per esterni
Uso	esterno
Montaggio necessario	No
Sfoderabile	No
Stile	Moderno
Fondo	PVC e spille in Acciaio Inox
Piedi	Metallo con tassello in plastica

Divano con struttura zincata e laccata in metallo,con legno marino. Imbottitura in poliuretano espanso a densità differenziata con piede in metallo e tassello in plastica. Fondo PVC e punti metallici in acciaio inox.

Spouf
www.spouf.it

MADE IN ITALY

Ocean 2p.

Art.3074

EN

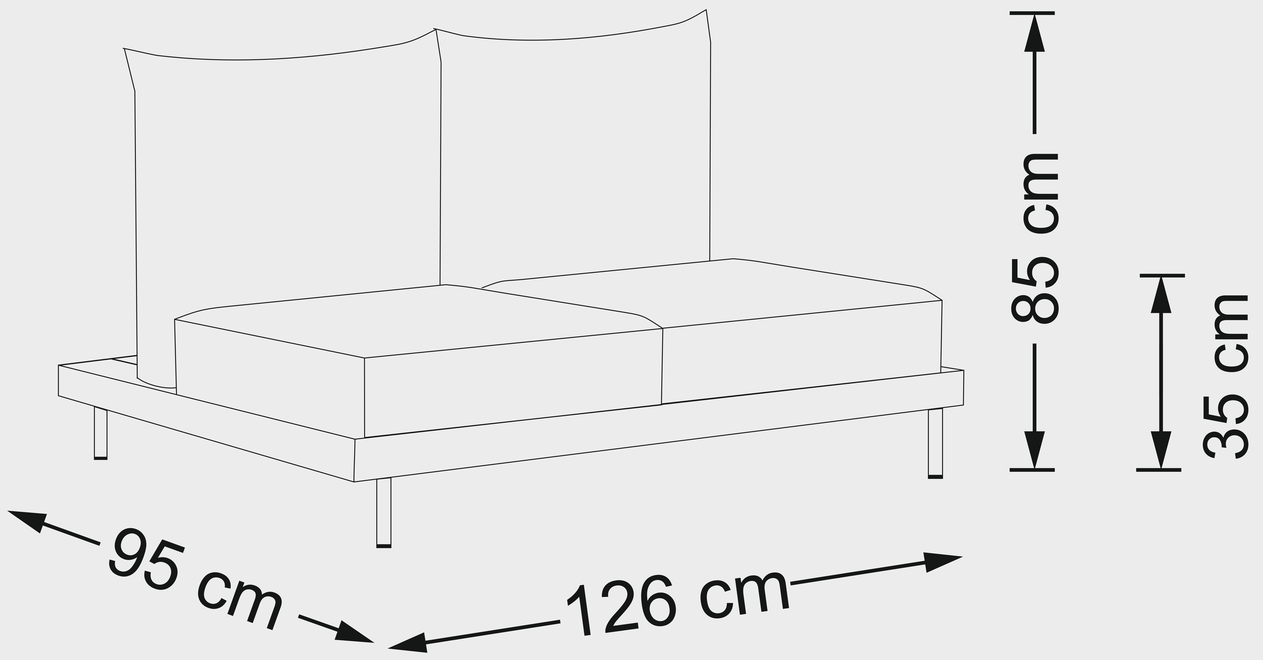

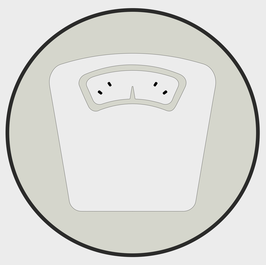

32Kg

INFORMATION

Structure	Metal,marine multilayer wood
Padding	Differentiated density polyurethane foam
Coating	Tissue for outdoor
Use	Outdoor
Assembly required	No
Removable	No
Style	Modern
Bottom	PVC and stainless steel pins
Foot	metal with plastic gusset

Sofa zinc-plated and lacquered metal structure, with marine wood. Polyurethane foam padding with differentiated density, metal foot and plastic dowel. PVC base and staples in stainless steel.

Spouf
www.spouf.it

MADE IN ITALY

Ocean 3p.

Art.3075

IT

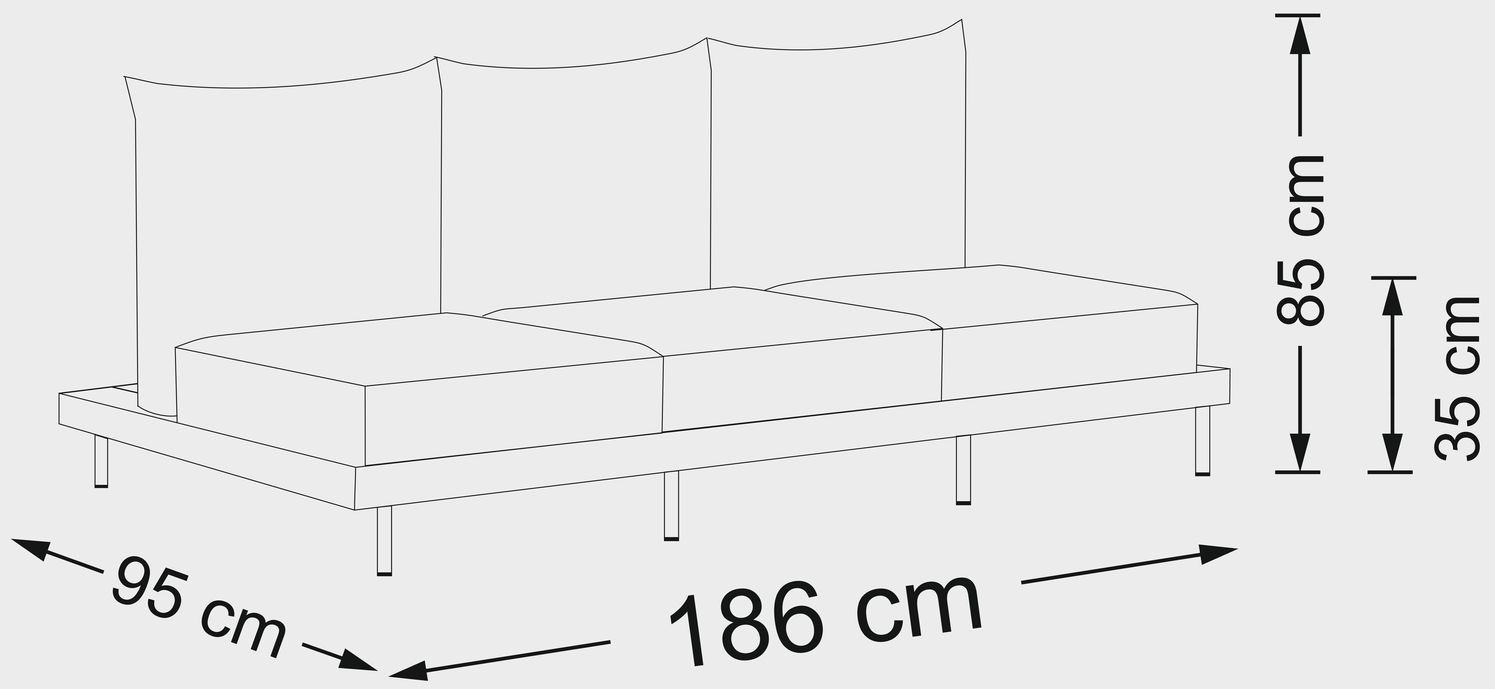

48

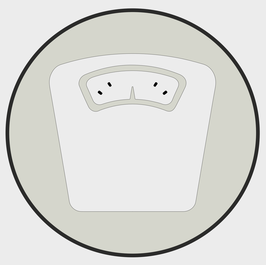

48Kg

INFORMAZIONI

Struttura	Metallo,Multistrato marino
Imbottitura	Poliuretano espanso a densità differenziata
Rivestimento	Tessuto per esterni
Uso	esterno
Montaggio necessario	No
Sfoderabile	No
Stile	Moderno
Fondo	PVC e spille in Acciaio Inox
Piedi	Metallo con tassello in plastica

Divano con struttura zincata e laccata in metallo,con legno marino. Imbottitura in poliuretano espanso a densità differenziata con piede in metallo e tassello in plastica. Fondo PVC e punti metallici in acciaio inox.

Spouf
www.spouf.it

MADE IN ITALY

Ocean 3p.

Art.3075

EN

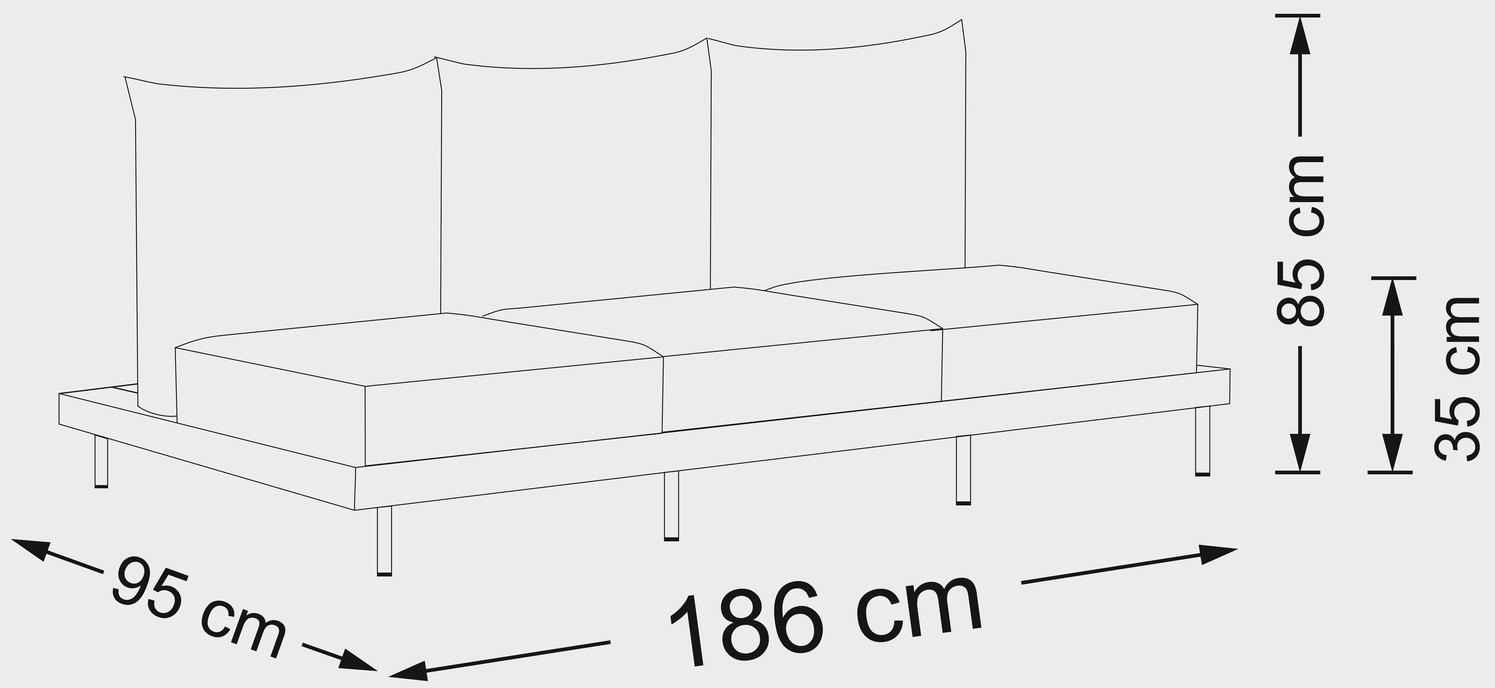

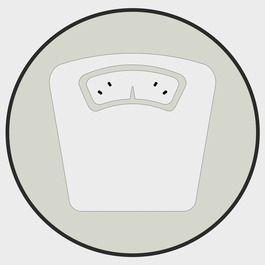

48Kg

INFORMATION

Structure	Metal,marine multilayer wood
Padding	Differentiated density polyurethane foam
Coating	Tissue for outdoor
Use	Outdoor
Assembly required	No
Removable	No
Style	Modern
Bottom	PVC and stainless steel pins
Foot	metal with plastic gusset

Sofa zinc-plated and lacquered metal structure, with marine wood. Polyurethane foam padding with differentiated density, metal foot and plastic dowel. PVC base and staples in stainless steel.

Spouf
www.spouf.it

MADE IN ITALY

Ocean 4p. + Tavolo

Art.3076

IT

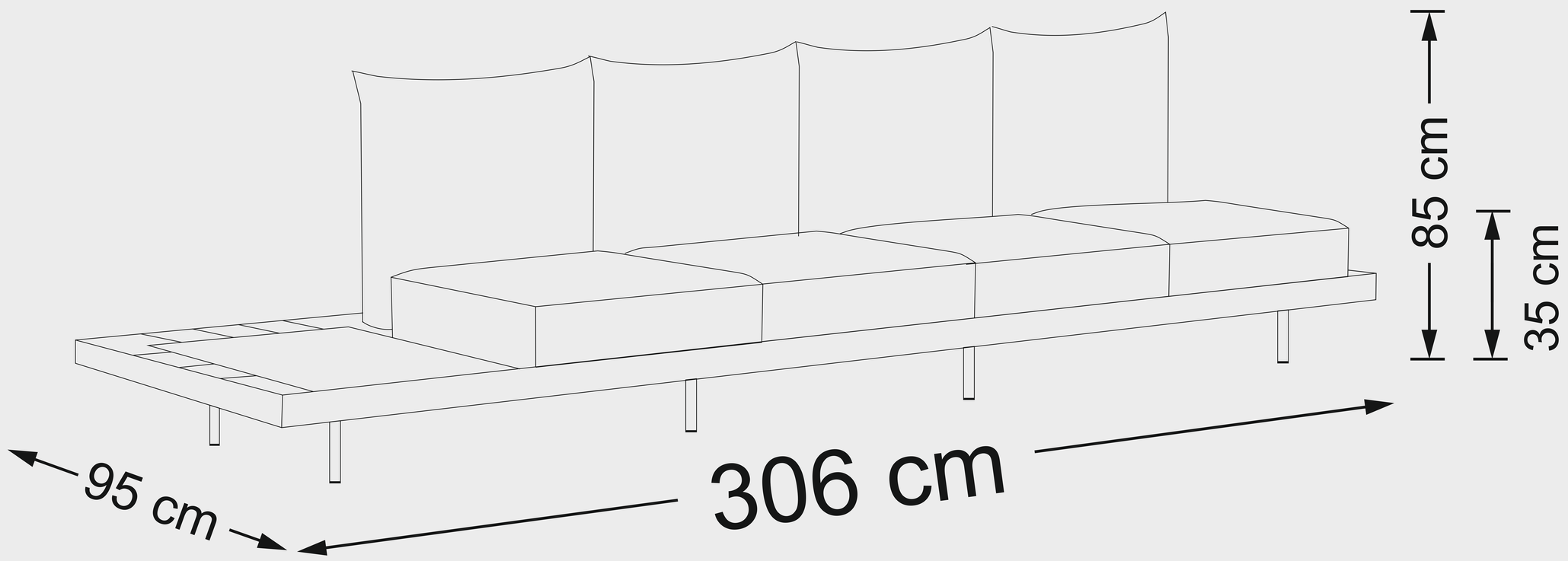

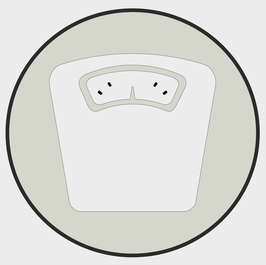

75Kg

INFORMAZIONI

Struttura	Metallo,Multistrato marino
Imbottitura	Poliuretano espanso a densità differenziata
Rivestimento	Tessuto per esterni
Uso	esterno
Montaggio necessario	No
Sfoderabile	No
Stile	Moderno
Fondo	PVC e spille in Acciaio Inox
Piedi	Metallo con tassello in plastica

Divano con struttura zincata e laccata in metallo,con legno marino. Imbottitura in poliuretano espanso a densità differenziata con piede in metallo e tassello in plastica. Fondo PVC e punti metallici in acciaio inox.

Spouf
www.spouf.it

MADE IN ITALY

Ocean 4p. + Table

Art.3076

EN

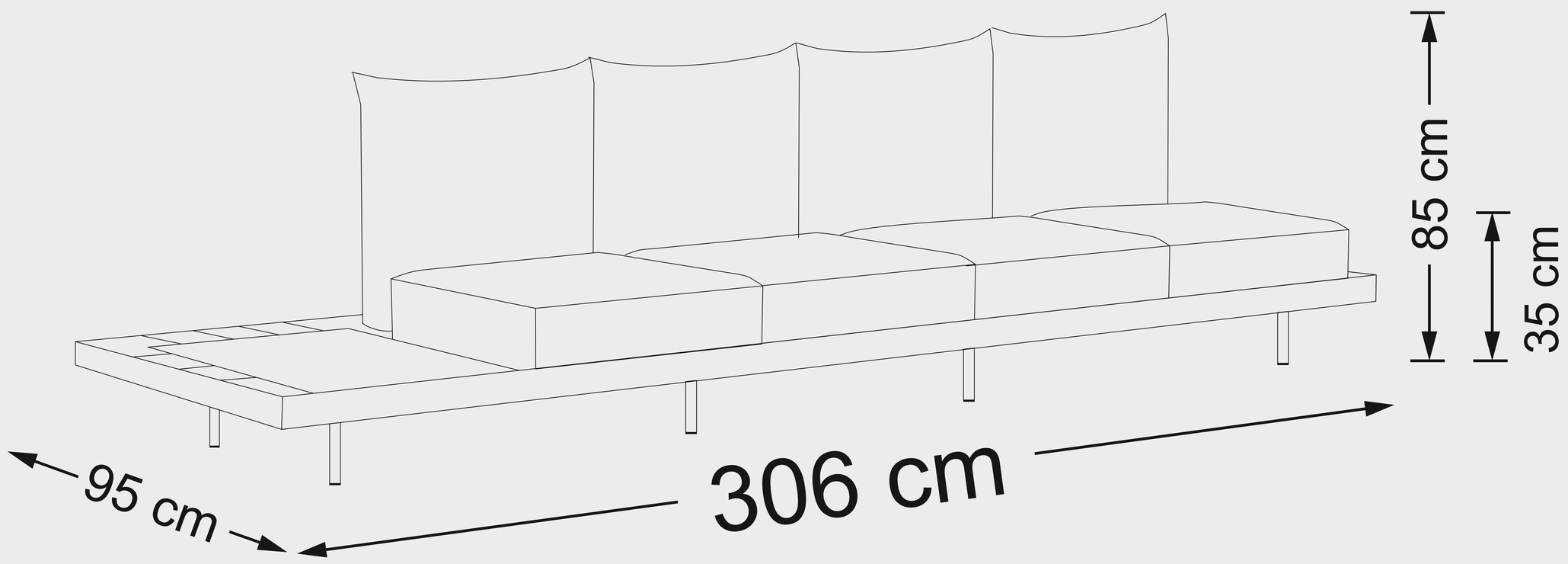

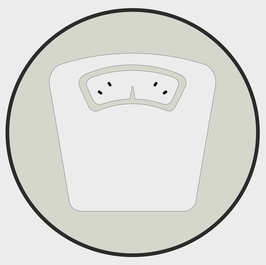

75Kg

INFORMATION

Structure	Metal,marine multilayer wood
Padding	Differentiated density polyurethane foam
Coating	Tissue for outdoor
Use	Outdoor
Assembly required	No
Removable	No
Style	Modern
Bottom	PVC and stainless steel pins
Foot	metal with plastic gusset

Sofa zinc-plated and lacquered metal structure, with marine wood. Polyurethane foam padding with differentiated density, metal foot and plastic dowel. PVC base and staples in stainless steel.

Spouf
www.spouf.it

MADE IN ITALY

Ocean 4p.

Art.3077

IT

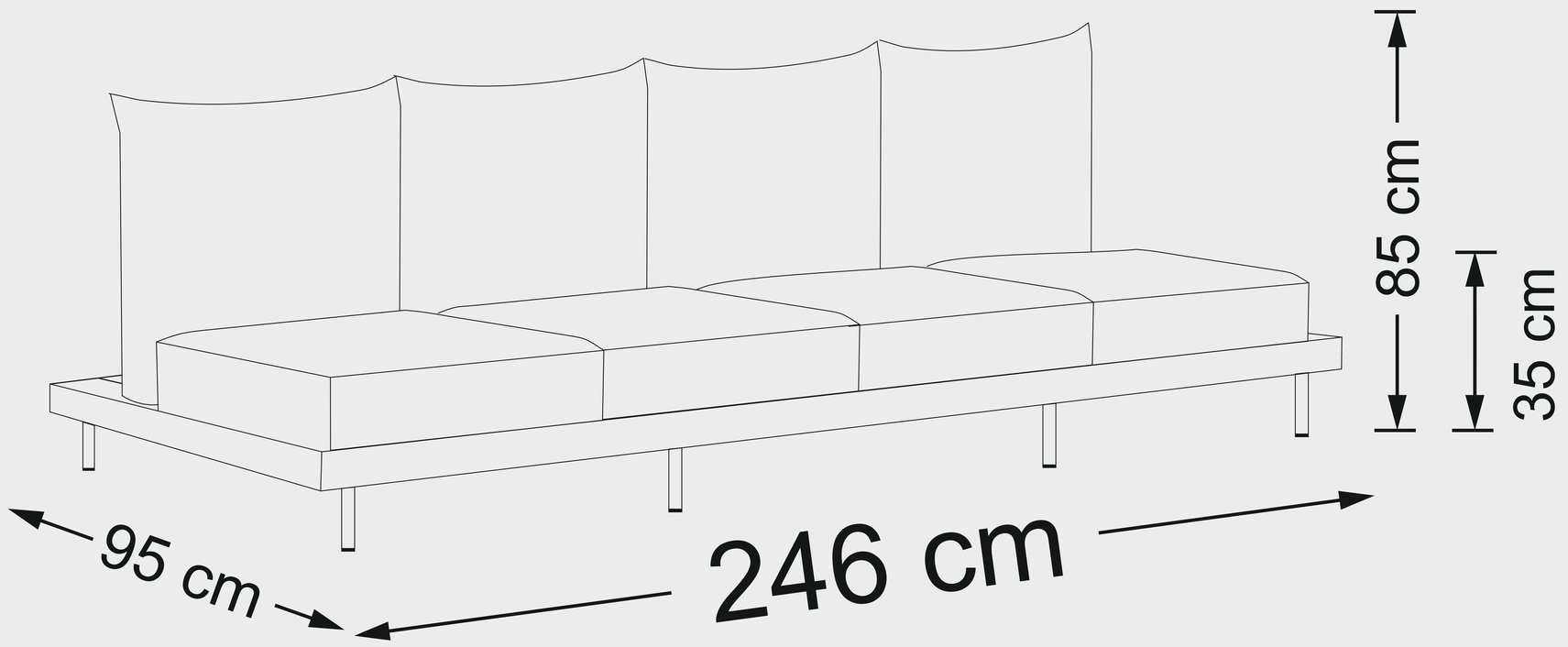

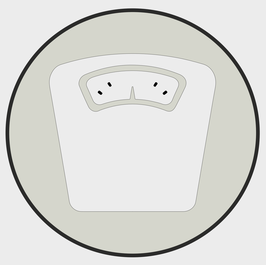

64Kg

INFORMAZIONI

Struttura	Metallo,Multistrato marino
Imbottitura	Poliuretano espanso a densità differenziata
Rivestimento	Tessuto per esterni
Uso	esterno
Montaggio necessario	No
Sfoderabile	No
Stile	Moderno
Fondo	PVC e spille in Acciaio Inox
Piedi	Metallo con tassello in plastica

Divano con struttura zincata e laccata in metallo,con legno marino. Imbottitura in poliuretano espanso a densità differenziata con piede in metallo e tassello in plastica. Fondo PVC e punti metallici in acciaio inox.

Spouf
www.spouf.it

MADE IN ITALY

Ocean 4p.

Art.3077

EN

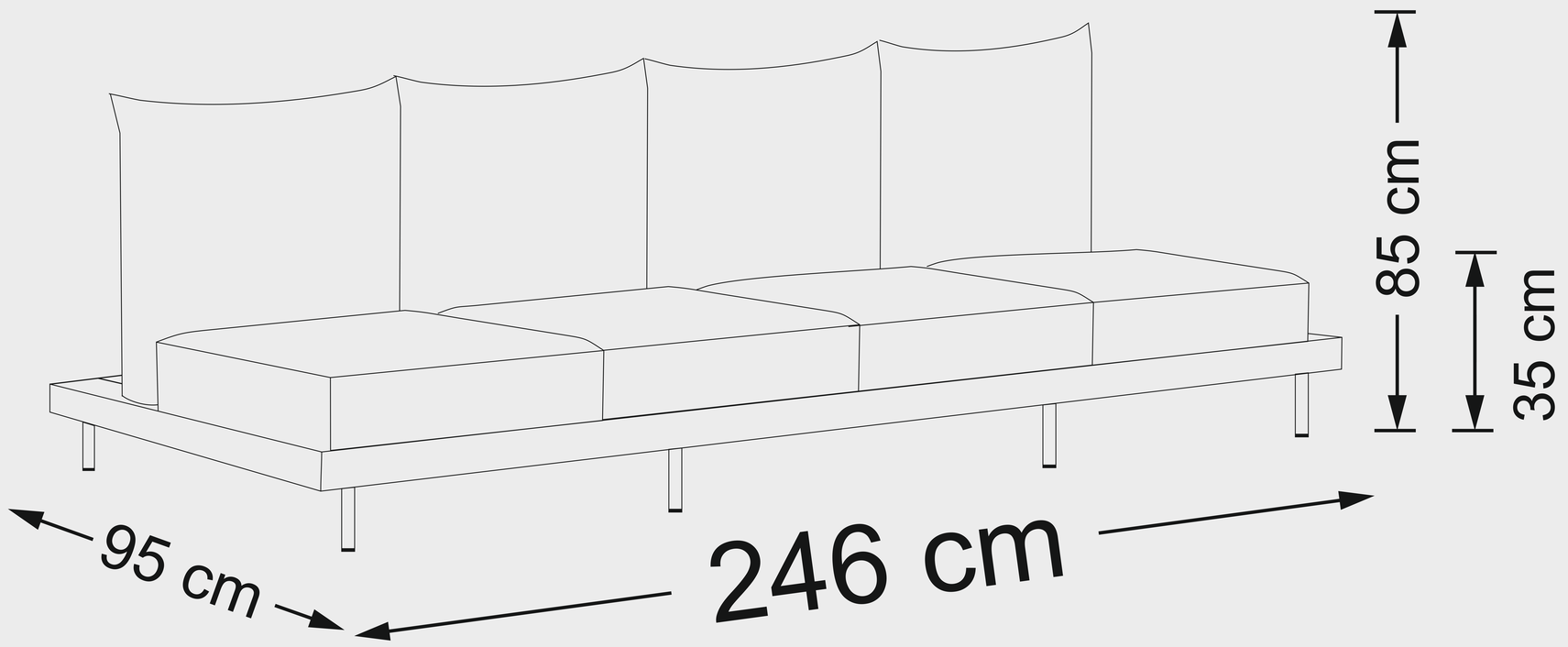

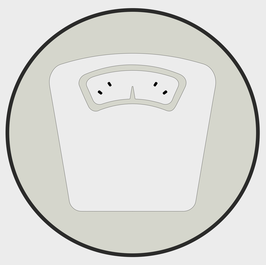

64Kg

INFORMATION

Structure	Metal,marine multilayer wood
Padding	Differentiated density polyurethane foam
Coating	Tissue for outdoor
Use	Outdoor
Assembly required	No
Removable	No
Style	Modern
Bottom	PVC and stainless steel pins
Foot	metal with plastic gusset

Sofa zinc-plated and lacquered metal structure, with marine wood. Polyurethane foam padding with differentiated density, metal foot and plastic dowel. PVC base and staples in stainless steel.

Spouf
www.spouf.it

MADE IN ITALY

Ocean 5p.

Art.3078

IT

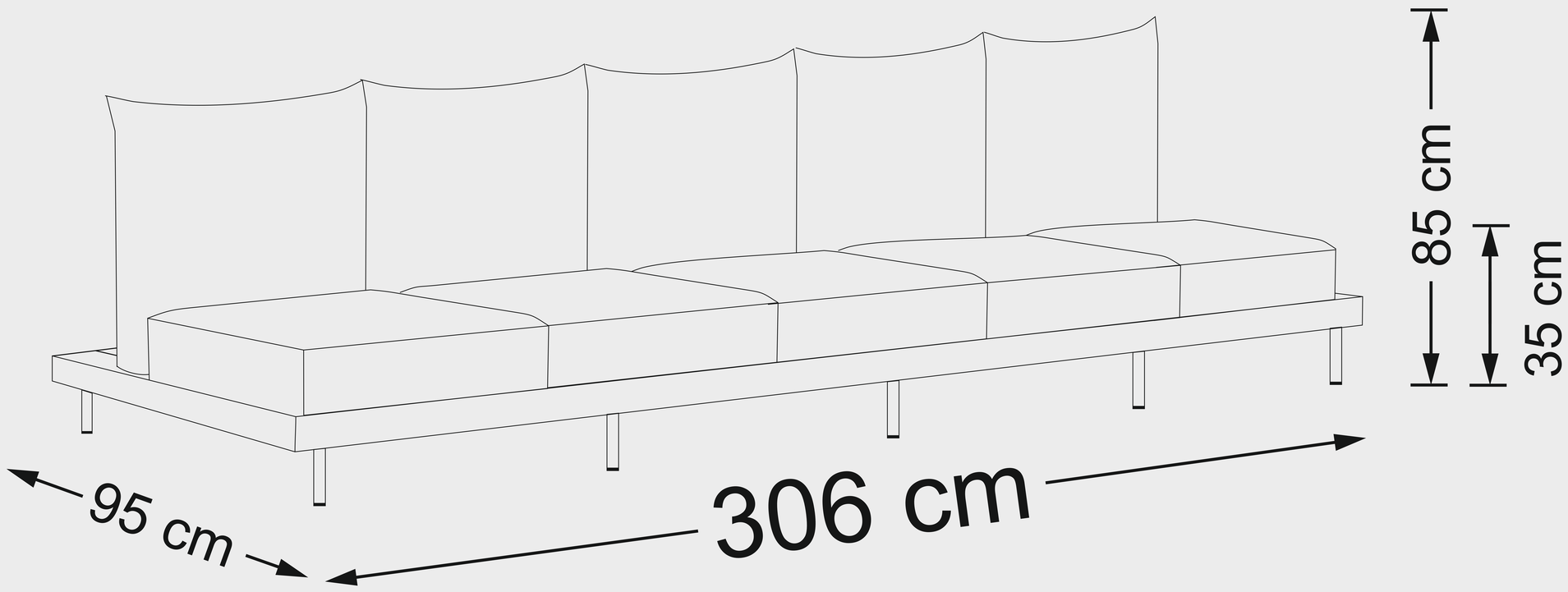

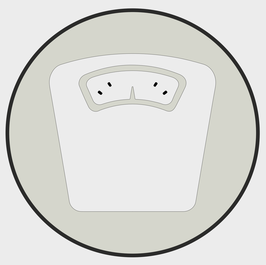

80Kg

INFORMAZIONI

Struttura	Metallo,Multistrato marino
Imbottitura	Poliuretano espanso a densità differenziata
Rivestimento	Tessuto per esterni
Uso	esterno
Montaggio necessario	No
Sfoderabile	No
Stile	Moderno
Fondo	PVC e spille in Acciaio Inox
Piedi	Metallo con tassello in plastica

Divano con struttura zincata e laccata in metallo,con legno marino. Imbottitura in poliuretano espanso a densità differenziata con piede in metallo e tassello in plastica. Fondo PVC e punti metallici in acciaio inox.

Spouf
www.spouf.it

MADE IN ITALY

Ocean 5p.

Art.3078

EN

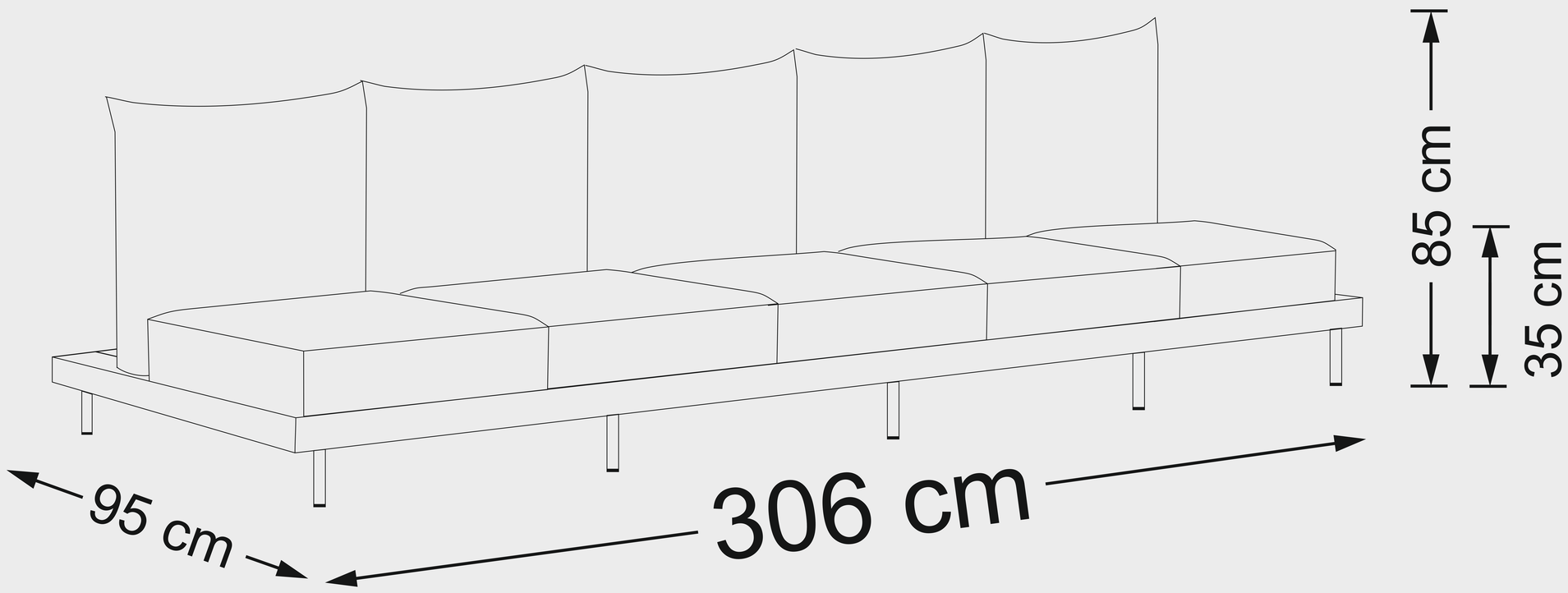

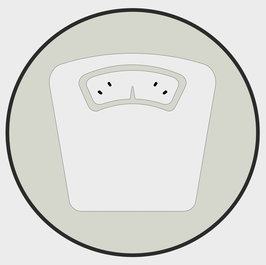

80Kg

INFORMATION

Structure	Metal,marine multilayer wood
Padding	Differentiated density polyurethane foam
Coating	Tissue for outdoor
Use	Outdoor
Assembly required	No
Removable	No
Style	Modern
Bottom	PVC and stainless steel pins
Foot	metal with plastic gusset

Sofa zinc-plated and lacquered metal structure, with marine wood. Polyurethane foam padding with differentiated density, metal foot and plastic dowel. PVC base and staples in stainless steel.

Spouf
www.spouf.it

MADE IN ITALY

Ocean Angolo

Art.3079

IT

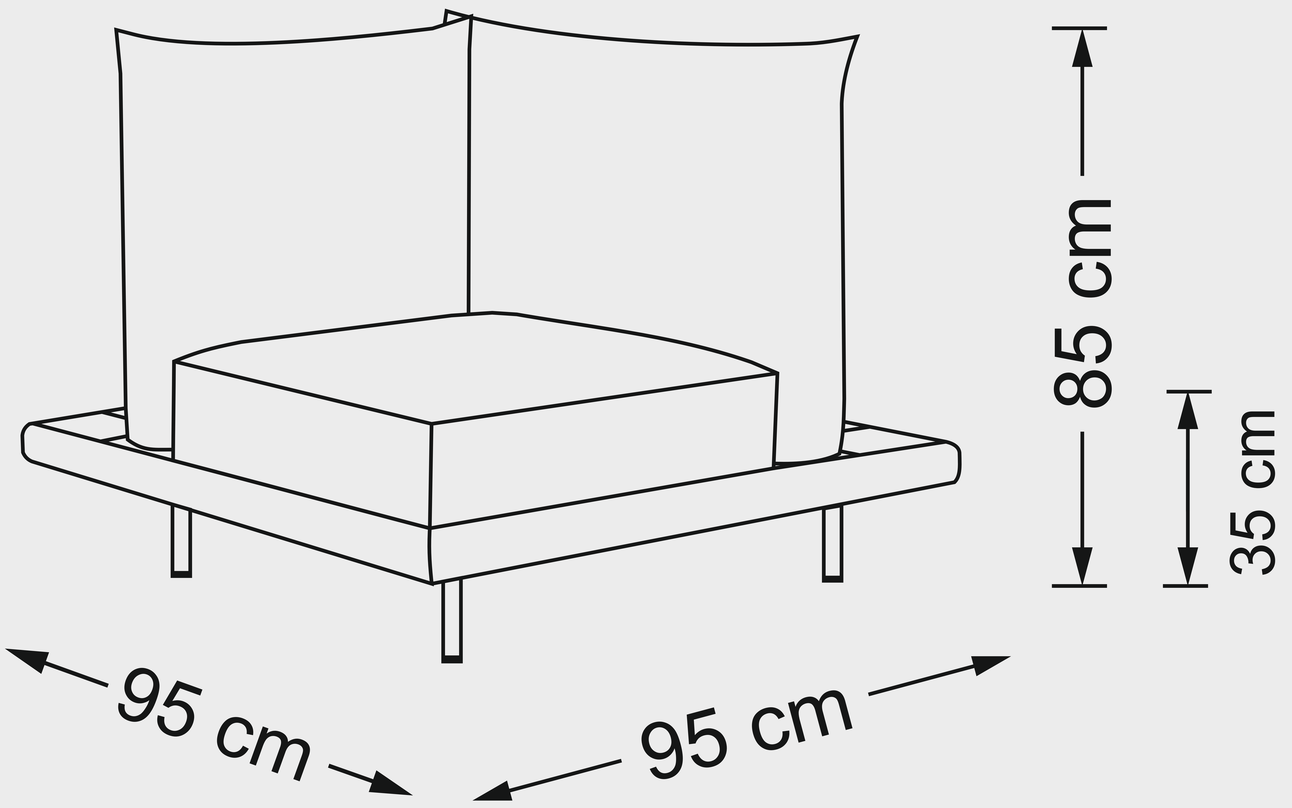

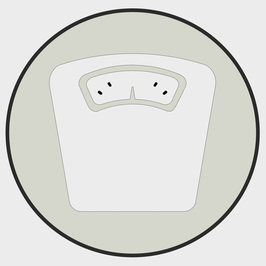

25Kg

INFORMAZIONI

Struttura	Metallo,Multistrato marino
Imbottitura	Poliuretano espanso a densità differenziata
Rivestimento	Tessuto per esterni
Uso	esterno
Montaggio necessario	No
Sfoderabile	No
Stile	Moderno
Fondo	PVC e spille in Acciaio Inox
Piedi	Metallo con tassello in plastica

Divano con struttura zincata e laccata in metallo,con legno marino. Imbottitura in poliuretano espanso a densità differenziata con piede in metallo e tassello in plastica. Fondo PVC e punti metallici in acciaio inox.

Spouf
www.spouf.it

MADE IN ITALY

Ocean Angle

Art.3079

EN

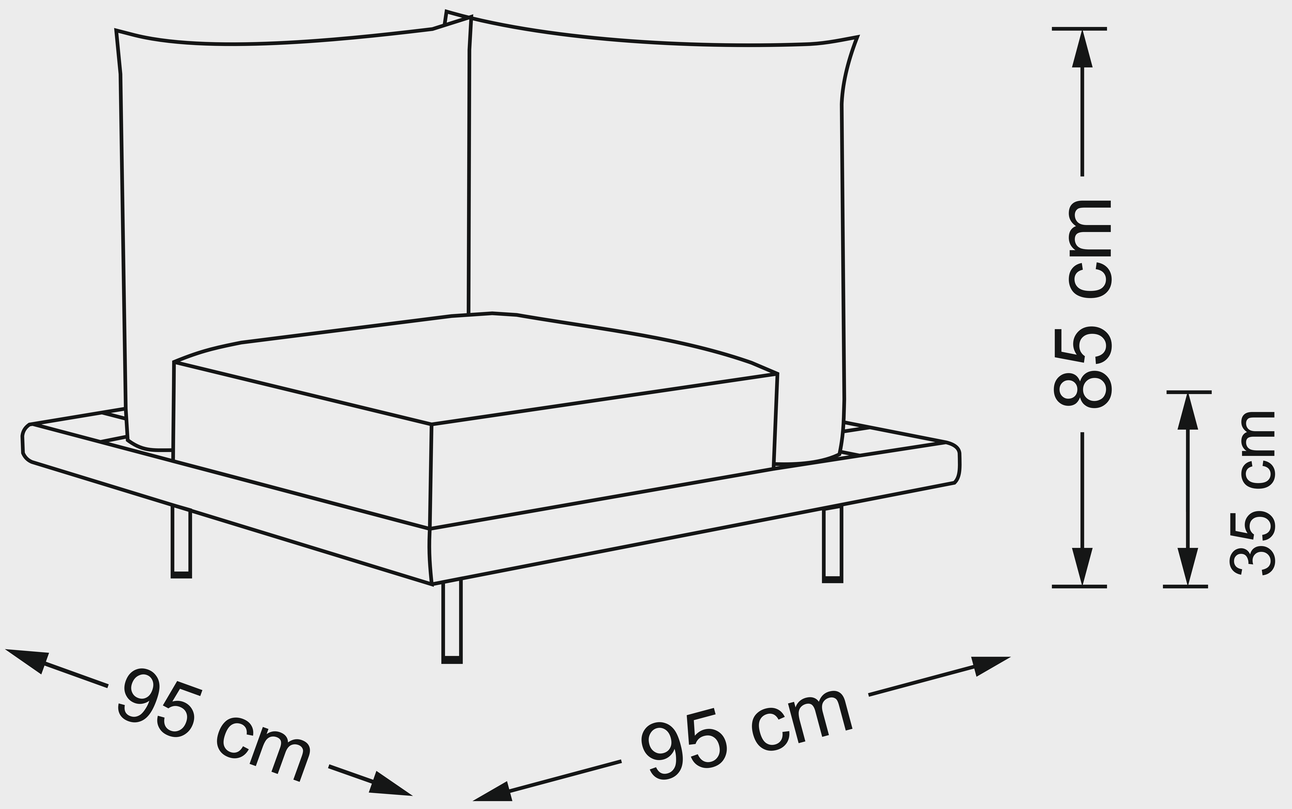

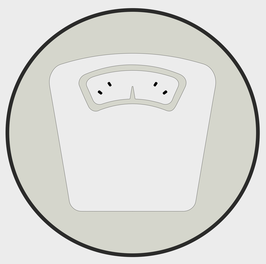

25Kg

INFORMATION

Structure	Metal,marine multilayer wood
Padding	Differentiated density polyurethane foam
Coating	Tissue for outdoor
Use	Outdoor
Assembly required	No
Removable	No
Style	Modern
Bottom	PVC and stainless steel pins
Foot	metal with plastic gusset

Sofa zinc-plated and lacquered metal structure, with marine wood. Polyurethane foam padding with differentiated density, metal foot and plastic dowel. PVC base and staples in stainless steel.

Spouf
www.spouf.it

MADE IN ITALY

Ocean 4p. + Tavolo

Art.3081

IT

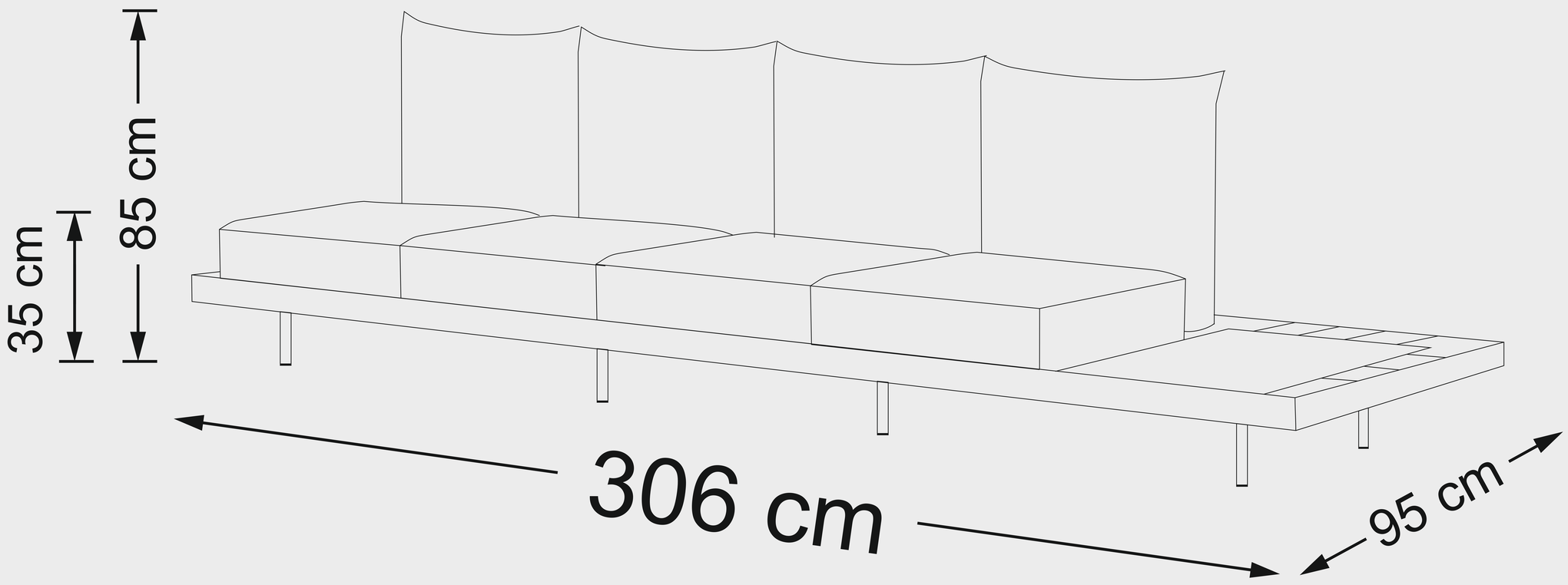

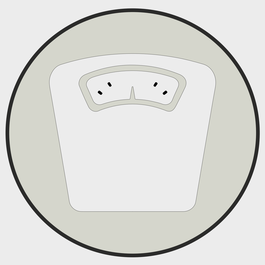

75Kg

INFORMAZIONI

Struttura	Metallo,Multistrato marino
Imbottitura	Poliuretano espanso a densità differenziata
Rivestimento	Tessuto per esterni
Uso	esterno
Montaggio necessario	No
Sfoderabile	No
Stile	Moderno
Fondo	PVC e spille in Acciaio Inox
Piedi	Metallo con tassello in plastica

Divano con struttura zincata e laccata in metallo,con legno marino. Imbottitura in poliuretano espanso a densità differenziata con piede in metallo e tassello in plastica. Fondo PVC e punti metallici in acciaio inox.

Spouf
www.spouf.it

MADE IN ITALY

Ocean 4p. + Table

Art.3081

EN

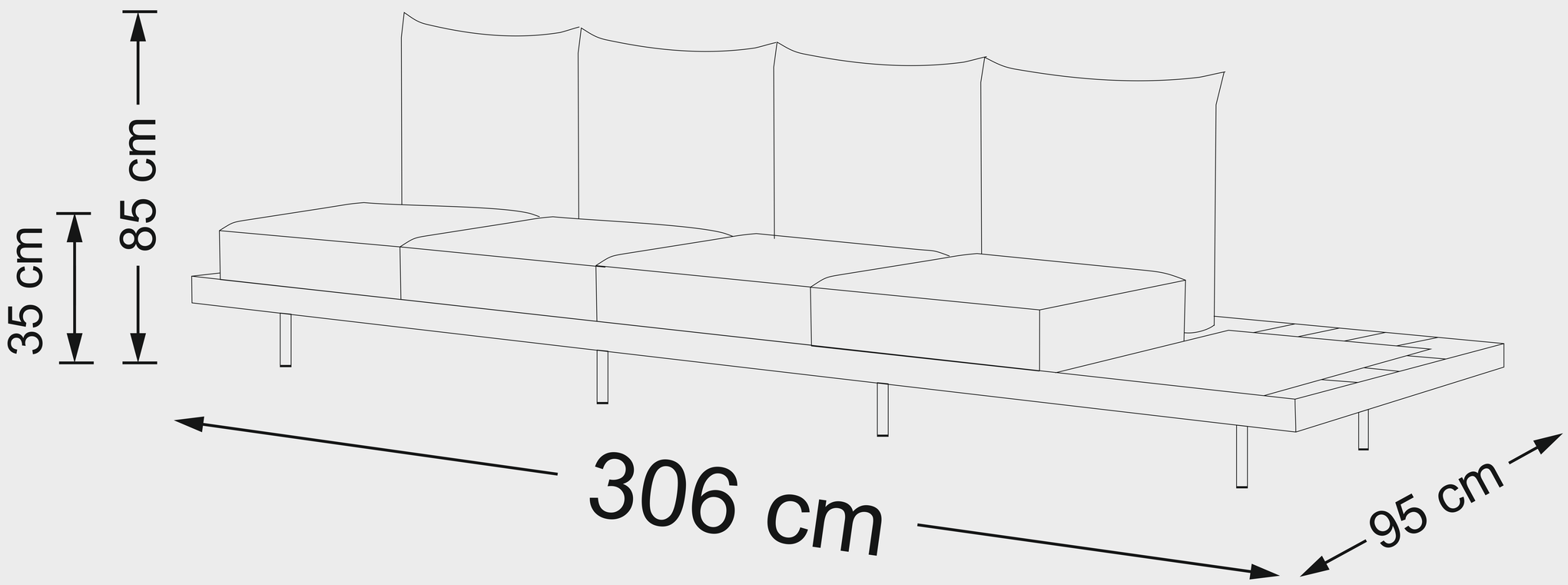

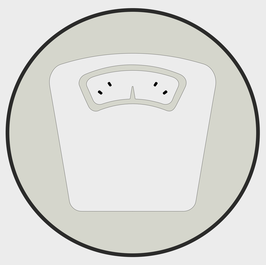

75Kg

INFORMATION

Structure	Metal,marine multilayer wood
Padding	Differentiated density polyurethane foam
Coating	Tissue for outdoor
Use	Outdoor
Assembly required	No
Removable	No
Style	Modern
Bottom	PVC and stainless steel pins
Foot	metal with plastic gusset

Sofa zinc-plated and lacquered metal structure, with marine wood. Polyurethane foam padding with differentiated density, metal foot and plastic dowel. PVC base and staples in stainless steel.

Spouf
www.spouf.it

MADE IN ITALY